REGULATOR TO GAS CYLINDER VALVE CONNECTION

CLOCKWISE

COUNTER CLOCKWISE

TYPE 1 CONNECTION TO GAS CYLINDER

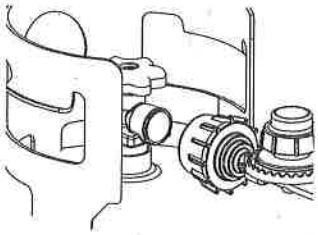

Inspect the hose before each use. If there are signs of wear, cuts or leaks replace turkey fryer hose & regulator with part 903070006.

REGULATOR CONTROL VALVE OPERATIONS

CLOCKWISE

COUNTER CLOCKWISE

REGULATOR CONTROL FLAME ADJUSTMENT

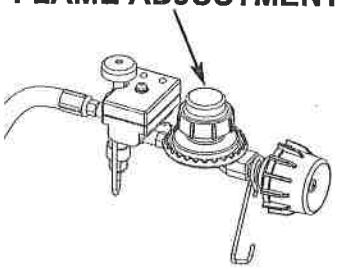

The regulator control valve is used to adjust the burner flame. Turning the control knob clockwise slowly will increase the burner flame and counter clockwise to decrease and shut the burner flame off.

Adjust air shutter to the burner until the burner flame is as blue as possible

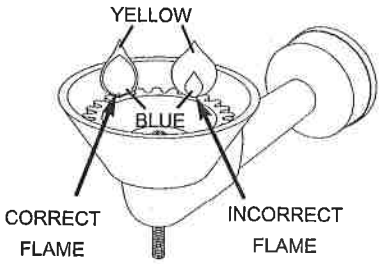

Type 1 Regulators will have a hook as shown.

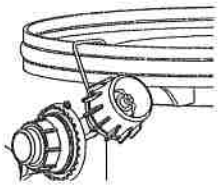

The Regulator Hook is used to keep the regulator off the ground when removed from the LP cylinder. Attach to appliance as shown.

BURNER LIGHTING INSTRUCTIONS

1. Check the regulator to be certain it is in the OFF position before connecting to the gas cylinder. Perform soapy water test before each use.

2. Open tank cylinder valve.

3. To start timer operation, push POWER button; both lights will blink once.

4. Press START button; green light will remain on, allowing 15 minutes of gas flow.

5. Turn regulator on.

6. Place a lit match to the burner from under the wind shield as shown below.

7. Slowly turn regulator control knob clockwise until the burner lights.

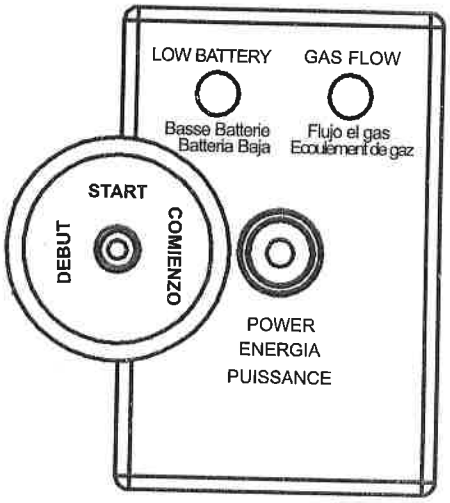

•Timer will run 15 minutes before shutting gas flow off.

•At 5 minutes remaining, gas flow light will blink slowly. At 2 minutes remaining gas flow light will blink quickly.

•If burner does not light within 5 seconds, turn regulator control valve OFF, then turn gas cylinder valve OFF. Wait 5 minutes for fumes to diminish, turn timer knob clockwise until its stops before relighting.

•If the flame is blown out wait 5 minutes for fumes to diminish before resetting timer and relighting.

•After the burner is lit, open the regulator valve until the flame increases. Use the air shutter on the burner to adjust the flame until it turns blue. Reduce flame.

•Fill Pot with water or oil. DO NOT fill pot more than 1/3 the pots full capacity. This will help avoid dangerous boil-overs. Note: DO NOT place your empty pot over the open flame. This will damage pot.

•Bring water or oil to the desired temperature by adjusting regulator control valve. Oil should never exceed 400°F (204°C). Oil will ignite at 550°F (287°C) to 700°F (371°C).

•Always use a thermometer when frying.

•After each use, first turn the regulator control valve OFF, then turn the gas cylinder OFF. Always allow fryer stand and pot with water or oil to cool completely before touching, moving, or storing.

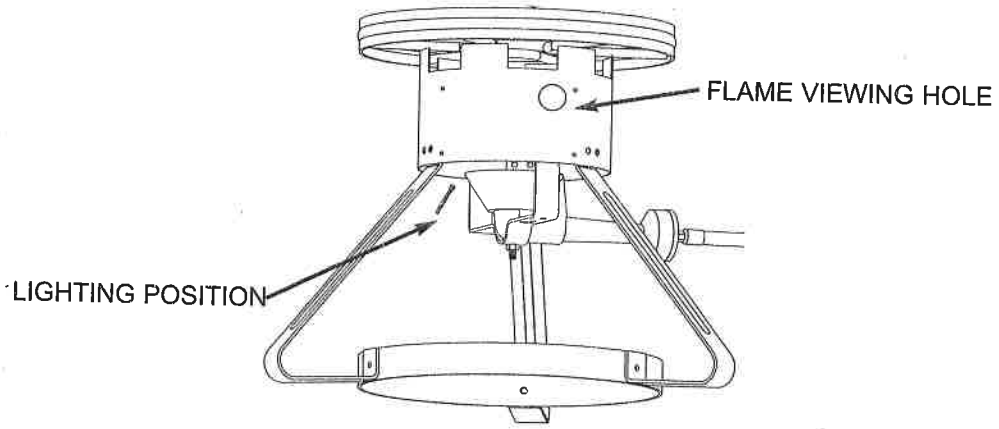

COOKING INSTRUCTIONS FOR VESSELS WITHOUT FILL LINES

STEP 1 - Place food product (turkey) on or in the holder (basket).

STEP 2 - Place food product and holder into the empty cooking vessel.

STEP 3 - Fill the cooking vessel with water just until the food product is completely submerged. For large pots only, there must be 3 in (8cm) between this level & the top of the vessel.

STEP 4 - Remove food product from the cooking vessel and either mark the water level on the side of the cooking vessel or measure the amount of water in the cooking vessel.

STEP 5 - Remove water and completely dry cooking vessel and food product.

STEP 6 - This is the amount of cooking oil the cooking vessel needs to be filled with to cook your food product.

DANGER

IF THE INFORMATION IN ITEMS 1-6 ABOVE IS NOT FOLLOWED EXACTLY, OIL OVERFLOW MAY OCCUR RESULTING IN DEATH, SERIOUS INJURY, OR PROPERTY DAMAGE.

FOR YOUR SAFETY FOLLOW THESE STEPS ON HOW TO PROPERLY DEEP FRY A TURKEY

STEP 1 - If a fill line is stamped on the pot then STEP 1 is not needed. Fill the pot with oil to the fill line and go to STEP 2. If there is no stamped line, place thawed turkey, up to 18 lbs (8kg) MAX size, into basket and lower turkey into empty pot. Fill pot with water until the butt of the turkey is covered. There must be 3 in (8cm) between this water level & the top of the pot. Remove the turkey from the pot allowing all water to drain from the turkey. Once turkey has been removed, mark the waterline. Empty the water from the pot and fill with oil up to the marked line.

STEP 2 - Insure that turkey is completely thawed and free of excess water and ice. Inject turkey with a marinade of your choice. Cover the outside of turkey with cajun dry rub reasoning. Replace the turkey in basket with legs pointing up. Ignite burner (see page 9) and bring oil temperature to 350°F (177°C). **Turn the burner off before placing the turkey into oil.** Wearing cooking gloves, and being sure to stay away from hot steam, lower the turkey into the oil very slowly and cover with lid. Re-light the burner. Using the thermometer keep the oil temperature at 350°F (177°C). Cook turkey for 3 minutes per pound and then add 5 minutes to total cooking time. Turkey may float before cooking time is complete. Continue cooking turkey for the total amount of time calculated. When cooking is complete, turn burner OFF and remove food slowly.

Example: Cooking a 16.5 lb (7.48kg). turkey
3 minutes x 16.5 = 49.5
49.5 minutes + 5 = 54.5
Total cooking time: 54.5 minutes

STEP 3 - Turn the turkey fryer OFF and remove the basket slowly. Hook basket to the side of pot. This is a safe and easy way to allow turkey to drain and cool at the same time.

Thawing a Turkey in Cold Water

Thawing Times
8lb (3.6kg) to 12lb (5.4kg) 4 to 6 hours
12lb (5.4kg) to 16lb (7.3kg) 6 to 8 hours
16lb (7.3kg) to 18lb (8.2kg) 8 to 10 hours

Turkeys thawed by the cold water method should be cooked immediately because conditions were not temperature controlled.